LAB MANUAL

SESSION: 2020-21

SUBJECT CODE: KCE 451
MATERIAL TESTING LAB

BRANCH –CIVIL ENGINEERING
FACULTY INCHARGE- MS KAJAL SINGH
LAB INSTRUCTOR- MR. ALOK KUMAR

Vision and Mission of the Department and Institute:

Institution Vision-

"To become a leading institute of providing professionally competent and socially responsive technocrats with high moral values"

Institution Mission-

- To create an ecosystem for dissemination of technical knowledge to achieve academic excellence.
- To develop technocrats with creative skills and leadership qualities, to solve local and global challenges.
- To impart human values and ethics in students, to make them socially and Eco-friendly responsible.

Vision of Department-

"To establish a system for future Civil Engineering professionals through academic excellence, competencies, overall upliftment in all horizons and inoculate morals and values among them."

Mission Of Department-

- **Mission-1** To provide overall forum towards enhancing academic brilliance among students.
- **Mission-2** To develop Civil Engineering Graduates to meet intellectual and professional challenges.
- **Mission-3** To meet the requirements of future social prospects.

Course Outcomes:

After completing this course, students will be able to:

Course Outcomes:		Knowledge Level, KL
CO1	Identify various building materials and to understand their basic properties.	K1
CO2	Understand the use of non-conventional civil engineering materials.	K3
CO3	Study suitable type of flooring and roofing in the construction process.	K4
CO4	Characterize the concept of plastering, pointing and various other building services.	K2

INDEX

LIST OF EXPERIMENTS

EXPERIMENT NO.: 1

Objective: To determines water absorption of brick.

Equipments/ Machines

a) Dry bricks

b) Weighing machine

Principle

Brick for external use must be capable of preventing rain water from passing through them to the inside of walls of reasonable thickness. A good brick should aborb water maximum 1/7 th of the weight of the brick

Methods/Procedures

(i) 20 bricks are taken randomly from a stack.

(ii) The bricks are put in an oven at a temperature of 1050C for drying.

(iii) Bricks are weighed in a digital weighing machine and is record asW1

(iv) The bricks are immersed in water at room temperature for 24 hours.

(v) After 24 hours immersion, the bricks are taken out of water and wiped with a damp cloth for 3 minutes

(vi) The bricks are weight again and recorded as W2.

(vii) Water absorption in % is calculated as $(W2-W1)/W1\times100$

Observations

SI NO	Weight W_1 (Kg)	Weight W_2 (Kg)	Water absorption in %	Remarks
1				
2				
3				
4				
5				

Calculation

Conclusion : water absorption value of brick =

EXPERIMENT NO. : 2

Objective To determine the shape and size of the supplied brick

Equipments/Machines

a) bricks

b) scale

Methods/Procedures

(i) 20 bricks are taken randomly from a stack. The bricks should be rectangular in shape with sharp edges and smooth surface.

(ii) Dimension i.e. length, breadth, &height of the bricks are measured by scale and recorded.

(iii) For good quality bricks, the dimension of 20 bricks should be within the following limits.

Length 3680 mm to 3920 mm

With 1740 mm to 1860 mm

Height 1740 mm to 1860mm

Observations

SL NO	Length (mm)	Breath(mm)	Height(mm)	Remarks
1				
2				
3				
4				
5				

Calculation :

Conclusion : shape and size of brick =

EXPERIMENT NO.: 3

Objective To determines the compressive strength of bricks

Equipments/Machines

Compressive strength testing machine, Bricks, Water, Sand, Cement, Trowel

Principle

Bricks are mostly subjected to compression and tension. The usual crushing strength of common hand moulded well burnt bricks is about 5 to 10 N/mm2 (50 to 100/kg/cm2) varying according to the nature of preparation of the clay. Pressed and machine moulded bricks made of thoroughly plugged clay are strongerthan common hand moulded bricks from carelessly prepared clay.

Methods/Procedures

(i) Eight bricks are taken for the compressive strength testing.

(ii) The bricks are then immersed in water at room temperature for 24 hours.

(iii) Then these are taken out of water and surplus water on the surfaces is wiped off with a moist cloth.

(iv) The frog of the bricks is flushed level with cement mortar (1:3)

(v) The bricks are stored under damp jute bags for 24 hours followed by its immersion in water at room temperature for three days.

(vi) The bricks are placed in the compression testing machine with flat faces horizontal and mortar filled face being upwards.

(vii) Load is applied at a uniform rate of 14 N/ m^2 per minute till failure.

Observations

SL NO	Load at Failure (N)	Average area of back faces (mm^2	Compressive Strength. (N/mm^2	Remarks
1				
2				
3				
4				
5				

Calculation :

Average strength of bricks =

Conclusion : Compressive strength of brick =

EXPERIMENT NO.: 4

Objective To determines the efflorescence of bricks

Equipments/Machines

Bricks, Water

Principle

Efflorescence is characterized by the white powder patches on the surface of the brick work, brought to the surface by water and deposited by evaporation. These Sault may be from saltwater in contact with brickwork, or from the mortar in the masonry joints or from the salt within the brick.

Methods/Procedures

1 Nil - When the deposited of Efflorescence is impressible.

2 Slight - When the deposited of Efflorescence does not cover more then 10% of the exposed area . .the brick

3 Moderate - When the deposited of Efflorescence more then 10% but less then 50% of the exposed area the brick

4 Heavy - When the deposited of Efflorescence more then 50% but the deposits do not power or flake away the brick surface.

5 Serious - When the deposits are heavy and power or flake away the brick surface.

Conclusion : Efflorescence value of brick =

Experiment No. 5

Normal Consistency of Hydraulic Cement

Object: This test method cover the determination of the normal consistency of Hydraulic cement. That is by determining the amount of water required to prepare Cement pastes for Initial and final time of setting test.

Apparatus:

1. Weight and weighing devices.
2. Glass graduates (200 or 250) ml capacity.
3. Vicat apparatus with the plunger end, 10 mm in diameter.
4. Electrical mixer, trowel and containers.
5. Mixing glass plate 30cm x 30cm.

Procedure:

1- Weigh 400g of cement and prepare the weight of water to be between 24% to 30% of the cement then places the dry paddle and the dry bowl in the mixing position in the mixer.
2- Place all the mixing water in the bowl.
3- Add the cement to the water and allow 30 s for absorption of the water.
4- Start the mixer at low speed for 30 s
5- Stop for (15 s) and make sure no materials have collected on the sides of the bowel.
6- Start mixing at medium speed for (1 min).
7- Quickly form the cement paste into the approximate shape of a ball with gloved hands
8- Putting hand at (15cm) distance, throw the cement paste ball from hand to hand six times.
9- Press the ball into the larger end of the conical ring; completely fill the ring with paste.
10- Remove the excess at the larger end by a single movement of the palm of the hand. Place the ring on its larger end on the base of the plate of Vicat apparatus.
11- Slice off the excess paste at the smaller end at the top of the ring by a single sharp- ended trowel and smooth the top. (Take care not to compress the paste).
12- Center the paste under the plunger end which shall be brought in contact with the surface of the paste, and tighten the set-screw.

13- Set the movable indicator to the upper zero mark of the scale or take an initial reading, and release the rod immediately. This must not exceed 30 seconds after completion of mixing.

14- The paste shall be of normal consistency when the rod settles to a point 10±1mm below the original surface in 30 seconds after being released.

15- . Make trial paste with varying percentages of water until the normal consistency is obtained. Make each trial with fresh cement.

16- . Prepare a table in the form:

W/c	Weight of cement (gm)	Water Volume (ml)	Penetration (mm)
24%			
26%			
28%			
30%			

17. From the curve state the w/c% which will give (10mm) that is the percentage for Normal Consistency

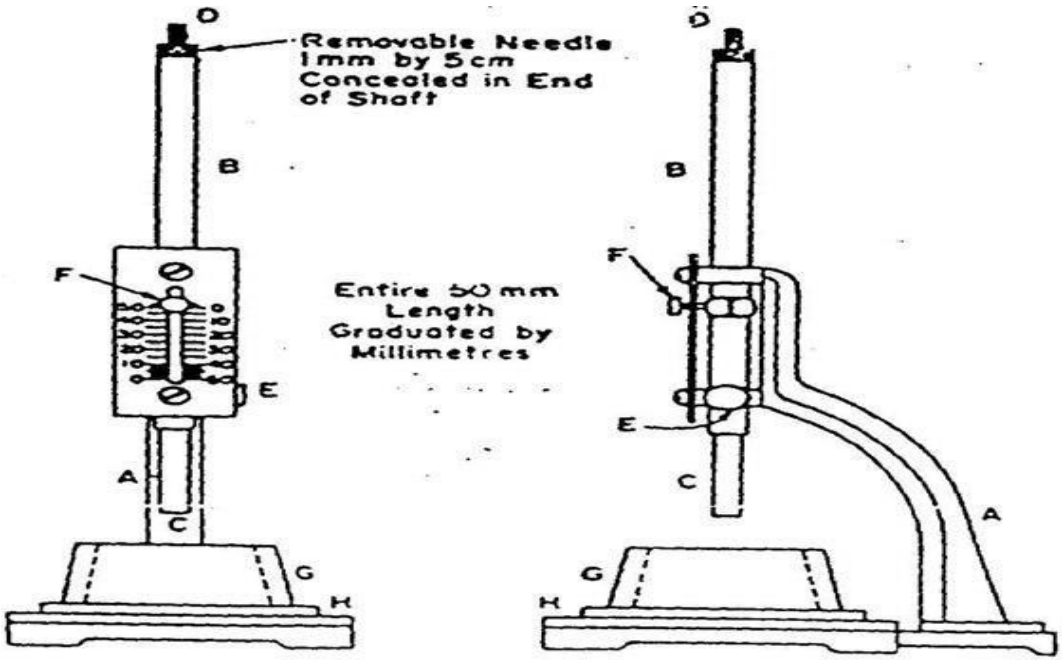

VICAT APPARATUS

<u>Result</u> "Initial and Final Time of Setting of Cement"

Experiment No. 6

Object: This test covers determination of the time of Setting of cement by means of the Vicat needle.

Apparatus:

1. Vicat Apparatus with the needle end, 1mm in diameter.
2. Weights and weighing Device.
3. Glass Graduates (200 or 250) ml capacity.
4. A trowel and containers.

Procedure:

1. Weight (400) gm cement.
2. Prepare amount of water as to that calculated in normal consistency test.
3. Prepare a cement paste following same steps mentioned in the previous test. Place in Vicat conical ring like test No. 9. Don't forget to record the time since the cement is added to the water.
4. Allow the time of setting specimen to remain in the moist cabinet for 30 minutes after molding without being disturbed. Determine the Penetration of the 1mm needle at this time and every (15) minutes until a penetration of 25mm or less is obtained
5. To read the penetration, lower the needle of Vicat Apparatus until it touches the surface of the cement paste. Tighten the screw and take an initial reading. Release the set screw and allow the needle to settle for 30 seconds, and then take the reading to determine the penetration.
6. Note that no penetration shall be made closer than (6mm) from any previous penetration and no penetration shall be made closer than (9.5mm) from the inside of the mold. Record the results of all penetration, then by drawing a curve determine the time when a penetration of 25 mm is obtained. This is the initial setting time
7. The final setting time is when the needle dose not sinks visible into the paste.
8. Draw a graph for (penetration — time). Show the time which gives penetration of (25 mm) this will be the initial setting time.

Note: According to I.S

1. Initial time of setting, not less than 30 min.
2. Final time of setting, not less than 10 hours

Experiment No. 7

Compressive Strength of Hydraulic Cement Mortars Using 50 mm Cube Specimens

Object: This test method covers determination of the compressive strength of cement mortars, using *2* in(50 mm) cube specimens.

Apparatus:

1- Weights and weighing device.2- Glass Graduate.
Specimens molds: three cubes of (50mm) side.
Mixer (electrically driven mechanical mixer of the type equipped with paddle and mixing bowl)
.5- Testing machine.
6- Tamper and trowel.

Materials: Graded standard sand should be used (C778). With cement in the proportion 1 cement: 2.75 Sand by weight. Use water – cement ratio of 0.485 for all Portland cements and 0.460 for all air- entraining Portland cements.

Note: For other than Portland and air- entraining Portland cements do flow table test, to determine the amount of mixing water.

Procedure:

A. Preparation of Mortar:

1. Weigh (300) gm of cement and Prepare the corresponding weights of standard sand and water.
2. Place the dry paddle and the dry bowl in the mixing position in the mixer. Then introduce the materials for a batch into the bowl and mix in the following manner:

i- Place all the mixing water in the bowl.

ii- Add the cement to the water, then start the mixer and mix at the low speed (140 ± 5 r/ min) for (30s).

iii- Add the entire quantity of sand slowly over a (30 s) period, while mixing at slow speed.

iv- Stop the mixer, change to medium speed (285 +10 r/min) and mix for 30 s.

V-Stop the mixer and let the mortar stand for 1.5 min. During the first (15 s) of this interval, quickly scrape down into the batch any mortar that may have collected on the side of the bowl.

vi-Finish by mixing for (1min) at medium speed.

B-Molding test specimens

(i) Thinly cover the interior faces of the specimen molds with oil.
(ii) Start molding the specimens within a total time of not more than 2.5 min after completion of mixing.
(iii) Place a layer of mortar about 25 mm (half the depth of the mold) in all the cube specimens.
(iv) Tamp the mortar in each cube 32 times (4x8), about 4 rounds, each round to be at right angles to theother. The tamping pressure shall be just sufficient to insure uniform filling of the molds.
(v) The 4 rounds of taming shall be completed in one cube before going to the next.
(vi) When the tamping of the first layer in all cubes is completed, fill the molds with the remaining mortarand tamp as specified for the first layer.
(vii) Cut off the mortar to a plane surface with a straight edge.
(Viii) Keep the molds in a moist room for 20-24 hours then open them and keep the Specimens in a waterbasin for a week.

C-Testing specimens:

1- After 7 days (+ 3 hours), take the specimens out of the basin, dry them with a clean cloth, put them, one after the other, in the testing machine.
2- The cubes must be put on one side, using extra steel plates up and down the specimen.
3- Start loading in a speed of 1.4 KN /sec or (350 kg /cm2) in a minute
4- When failure, record load and the compressive strength.

Calculations:

1- Table the results:

Cube No.	Load(kN)	Compressive strength(MPa)

2- Compare with [$\sigma c \geq 19.3$MPa [For type I cement] age 7 days.

Fig.(1) The mixer to be used to mix the mortar.

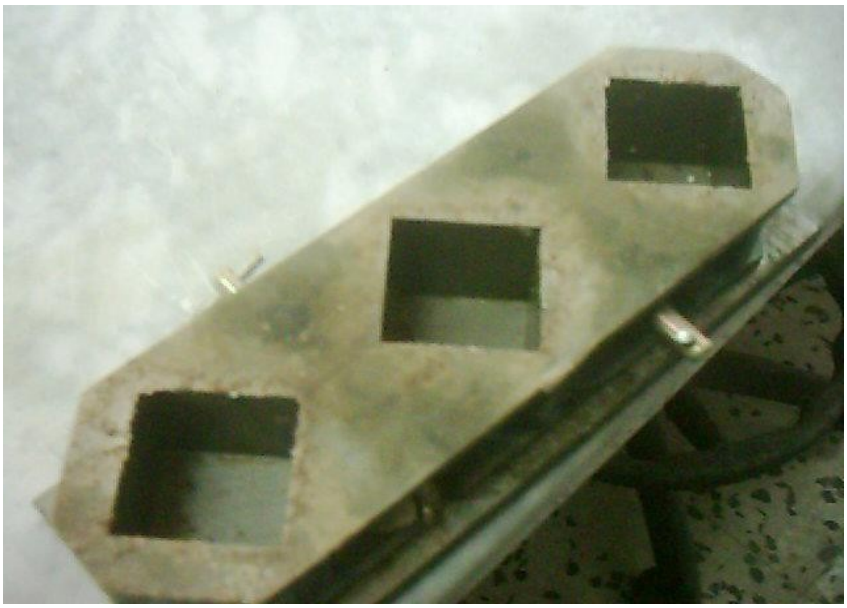

Fig. (2) The specimens molds.

<u>Result:</u> "Fineness of Hydraulic Cement by No.100 or No. 200 Sieve"

Experiment No. 8

Object: This test method covers determination of the finesses of hydraulic cement by means of the 150µm (No.100) and 75µm (No.200) sieves.

Apparatus:-

1. Sieve: - Standard 150µm (No.100) or 75µm (No.200) sieves.
2. Balance and weights.
3. Brush: a bristle brush will be required for use in cleaning the 150 µm or 75µm sieve.
4. A pan and a cover for the sieve.

Procedure:

1. Place 50-gm sample of the cement on the clean, dry (No.100) or (No.200) sieve with the pan attached.
2. While holding the sieve and uncovered pan in hands, sieve with a gentle wrist motion until most of the fine material has passed through and the residue looks fairly clean (3 or 4 minutes).
3. Place the cover on the sieve and remove the pan.
4. With the sieve and cover held firmly in one hand, gently tap the side of the sieve with the handle of the brush used for cleaning the sieve.
5. Empty the pan and wipe it out with a cloth, replace the sieve in the pan and carefully remove the cover.
6. Continue sieving without the cover for 5 to 10 min or until not more than (0.05gm) of the material passes through in 1 minutes of continuous sieving.
7. Carefully open the set and transfer the residue on the sieve to a white clean paper, and record the weight.
8. Calculate the percentage residue as:

$$\% \text{ residue} = \frac{\text{wt. of residue}}{50} \times 100$$

9. Specifications require that %retained on sieve (No.200) shall not exceed 22%. And on sieve (No.100) not more than 10%.

Result:

Experiment No. 9

Object- To determine the soundness of the given sample of cement by "Le- Chatelier" method.

Apparatus- Le - Chatelier apparatus conforming to IS 514-1969, balance, weights, water bath.

Introduction- It is essential that the cement concrete shall not undergo appreciable change in volume after sitting. This is ensured by limiting the quantities of free lime, magnesia and sulphates in cement which are the causes of the change in volume known a unsoundness. Unsoundness in cement does not come to surface for a considerable period of time.

Procedure-

1. Place the lightly oiled mould on a lightly oiled glass sheet and fill it with cement paste formed by gauging cement with 0.78 times the water required to give a paste of standard consistency.
2. The paste shall be gauged in the manner and under the conditions prescribed in determination of consistency of standard cement paste, taking care to keep the edges of the mould gently together.
3. While this operation is being performed cover the mould with another piece of glass sheet, place a small weight on this covering glass sheet and immediately submerge the whole assembly in water at a temperature of 27º - 2ºC and keep there for 24 hours.
4. Measure the distance separating the indicator points.
5. Submerge the moulds again in water at the temperature prescribed above.
6. Bring the water to boiling, with the mould kept submerged for 25 to 30 minutes, and keep it boiling for three hours.
7. Remove the mould from the water allow it to cool and measure the distance between the indicator points.
8. The difference between these two measurements represents the expansion of the cement.
9. For good quality cement this expansion should not be more than 10 mm.

Observations- Initial distance between the indicator points in mm =

Final distance between the indicator points in mm =

Expansion in mm = final length-initial length=

Result- Expansion in mm=

Experiment No. 10

Coarse Aggregate Tests - Aggregate Crushing Strength Test

Object: To determine crushing strength of a given aggregate as per **IS: 2386 part – IV**

Apparatus:

1. A steel cylinder of internal diameter 15.2cm (Steel cylinder with open ends)
Square base plate, plunger having a piston diameter of 15cm.

2. A cylindrical measure of internal diameter of 11.5 and height 18 cms.

3. Steel tamping rod having diameter of 1.6 cms length 45 to 60 cms.

4. Balance of capacity 3 kg with accuracy up to 1 gm.

5. Compression testing machine capable of applying load of 40 tones at a loading Rate of 4 tons per minute.

Theory and Scope: This is one of the major Mechanical properties required in a road stone. The test evaluates the ability of the Aggregates used in road construction to withstand the stresses induced by moving vehicles in the form of crushing. With this the aggregates should also provide sufficient resistance to crushing under the roller during construction and under rigid tyre rims of heavily loaded animal drawn vehicles.

The crushing strength or aggregate crushing value of a given road aggregate is found Out as per **IS-2386 Part-** 4.

The aggregate crushing value provides a relative measure of resistance to crushing under a gradually applied compressive load. To achieve a high quality of pavement aggregate possessing low aggregate crushing value should be preferred.

The aggregate crushing value of the coarse aggregates used for cement concrete pavement at surface should not exceed 30% and aggregates used for concrete other than for wearing surfaces, shall not exceed 45% as specified by Indian Standard (IS) and Indian Road Congress (IRC).

Procedure:

1. The aggregate in surface-dry condition before testing and passing 12.5 mm sieve and retained on 10 mm sieve is selected.

2. The cylindrical measure is filled by the test sample of the aggregate in three layers of approximately equal depth, each layer being tamped 25 times by the rounded end of the tamping rod.

3. After the third layer is tamped, the aggregates at the top of the cylindrical measure are leveled off by using the tamping rod as a straight edge. Then the test sample is weighed. Let that be WI gm.

4. Then the cylinder of test apparatus is kept on the base plate and one third of the sample from cylindrical measure is transferred into cylinder and tamped 25 times by rounded end of the tamping rod.

5. Similarly aggregate in three layers of approximately equal depth, each layer being Tamped 25 times by rounded end of the tamping rod.

6. Then the cylinder with test sample and plunger in position is placed on compression testing machine.

7. Load is then applied through the plunger at a uniform rate of 4 tons per minute until the total load is 40 tones and the load is released.

8. Aggregates including the crushed position are removed from the cylinder and sieved on a 2.36mm IS. Sieve and material which passes this sieve is collected and weighed. Let this be W2 gm.

9. The above step is repeated with second sample of the same aggregate. The two tests are made for the same specimen for taking an average value.

10. Total weight of dry sample taken is WI gm weight of the portion of crushed material passing 2.36mm IS sieve be W2 gm.

11. Then the aggregate crushing value is defined as the ratio of weight of fines passing the specified IS sieve to the total weight of the sample (WI).

Aggregate crushing value = 100*W2/WI%

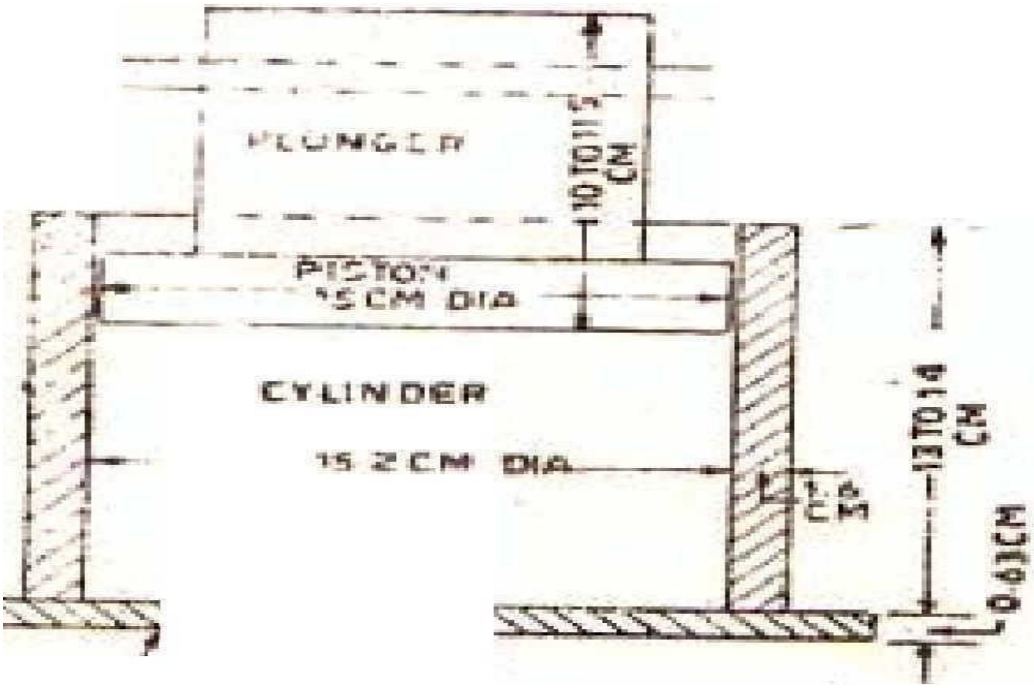

Aggregate Crushing Test Apparatus

Observation and Calculation:

Average aggregate crushing strength value	Aggregate crushing value %	Weight of fine passing 2.36mm IS sieve, w2gm	Total weight of dry aggregate sample 10 gm	Trials
				1
				2

Aggregate crushing value = 100*W2/Wl

Result: The mean (average) of the crushing value aggregate is_____%

Experiment No. 11

Impact value of Aggregate

Object: To determine the aggregate impact value of given aggregate as per I.S-2386 Part IV.

Apparatus: The apparatus consists of an

1. **Impact testing machine:** The machine consists of a metal base.
   A detachable cylindrical steel cup of internal diameter 10.2cm and depth 5cm. A metal hammer of weight between 13.5 to 14 Kg, l0 cm in diameter and 5cm long. An arrangement for raising the hammer and allow it to fall freely between vertical guides from a height of 38cm on the test sample in the cup.
2. A cylindrical metal measure having 7.5cm and depth of 5cm for measuring aggregates.
3. A tamping rod of circular cross section, l cm in diameter and 23cm long, rounded at one end.
4. I.S. sieve of sizes 12.5mm, l0mm and 2.36mm.
5. Balance of capacity not less than 500gm to weigh accurate up to 0.0lgm.

Theory and Scope: Toughness is the property of a material to easiest impact. Due to moving loads the aggregates are subjected to pounding action or impact and there is possibility of stones breaking into smaller pieces. Therefore a test designed to evaluate the toughness of stones i.e., the resistance of the stones to fracture under repeated impacts may be called Impact test on aggregates. The test can also be carried on cylindrical stone specimen known as Page Impact test. The aggregate Impact test has been standardized by Indian Standard Institution. The aggregate impact test is conducted as per **IS-2386 Part IV.**

The aggregate Impact value indicates a relative measure of the resistance of aggregate to a sudden shock or an Impact, which in some aggregates differs from its resistance to a slope compressive load in crushing test. A modified Impact test is also often carried out in the case of soft aggregates to find the wet Impact value after soaking the test sample.

Various agencies have specified the maximum permissible aggregate Impact values for the different types of pavements. IRC has specified the following values.

The maximum allowable aggregate Impact value for water bound Macadam; Sub-Base coarse 50% where as cement concrete used in base course is 45%. WBM base course with bitumen surface in

should be 40%. Bituminous Macadam base course should have A.I.V of 35%. All the surface courses should possess an A.I.V below 30%.

Procedure:

1. The test sample consists of aggregates passing 12.5mm sieve and retained on l0 mm sieve and dried in an oven for 4 hours at a temperature of 100 C to 110 C.
2. The aggregates are filled Up to about 1/3 full in the cylindrical measure and tamped 25 times with rounded end of the tamping rod.
3. The rest of the cylindrical measure is filled by two layers and each layer being tamped 25 times
4. The overflow of aggregates in cylindrically measure is cut off by tamping rod using it has a straight edge.
5. Then the entire aggregate sample in a measuring cylinder is weighted nearing to 0.0lgm.
6. The aggregates from the cylindrical measure are carefully transferred into the cup which is firmly fixed in position on the base plate of machine. Then it is tamped 25 times.
7. The hammer is raised until its lower face is 38cm above the upper surface of aggregates in the cup and allowed to fall freely on the aggregates. The test sample is subjected to a total of 15 such blows each being delivered at an interval of not less than one second. The crushed aggregate is than removed from the cup and the whole of it is sieved on 2.366mm sieve until no significant amount passes. The fraction passing the sieve is weighed accurate to O.lgm. Repeat the above steps with other fresh sample.
8. Let the original weight of the oven dry sample be Wl gm and the weight of fraction passing 2.36mm I.S sieve be W2gm. Then aggregate Impact value is expressed as the % of fines formed in terms of the total weight of the sample.

$$\text{Aggregate Impact Value} = 100 * \frac{w\,2\,\%.}{WI}$$

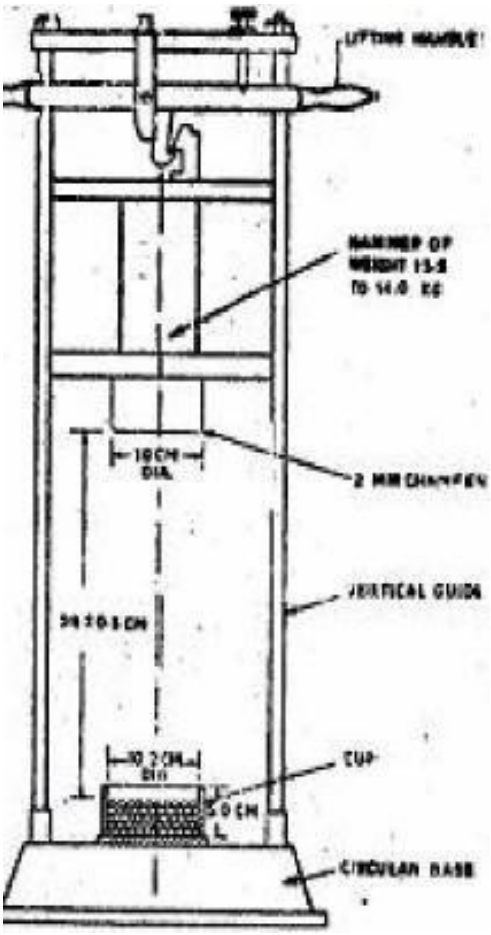

Aggregate Impact Testing Machine

Observation and Calculation:

S no.	Details of Sample	Trial 1	Trial 2	Average
1.	Total Weight of aggregate sample filling the cylinder 1 measure = W_1 g			
2.	Weight of aggregate passing 2.36 mm sieve after the test =W_2g			
3.	Weight of aggregate retained 2.36 mm sieve after the test = W_2 g			
4.	(WI- W_2 + W_3)			
5.	Aggregate Impact Value = (W2!WI) * 100 Percent			

Result: The mean A.I.V is

Experiment No. 12

Specific Gravity, Bulk Density and Absorption of fine Aggregate

Object: This test method covers the determination of Bulk and Apparent Specific Gravity and Absorptionof fine aggregate.

Materials: - 1 kg of sand is used using sample splitter.

Apparatus:

1-A balance having capacity of 1kg or more sensitive to 0.1gm

2- Pycnometer a flask or other suitable container into which the fine aggregate sample can be introducedIt is usually of 500cm^3 capacity.

3- Mould: a metal mould in the form of a frustum of a cone with dimensions as follows:

3 7mm inside diameter at the top, 90mm inside diameter at the bottom and 75mm in height.

4-Tamper: A metal tamper weighing 340±15gm and having a flat circular tamping face 25mm in diameter.5- Electrical Oven.

6- A container suitable to submerge the sample with water.

Preparation of the test Specimen:-

1-Obtain approximately 1kg of the fine aggregate using sample splitter.

2- Dry it in a suitable pan or vessel to constant weight at 110°C. Allow it to cool to a comfortable handling temperature, cover with water by immersion and permit to stand for 24 hours.

3- Decant excess water with care to avoid loss of fines, spread the sample on a flat non absorbent surface exposed to a gently moving current of warm air.

4- Stir frequently to get homogeneous drying until achieving the saturated surface dry condition. Use cone test for surface moisture.

5- Hold the mould firmly on a smooth nonabsorbent surface with the large diameter down. Place a portion of partially dried fine aggregate loosely in the mould by filling it to over following and heaping additional materials above the top of the mould.

6- Lightly tamp the sand into the mould with 25 light drops of the tamper. Each drop should start about 5mm above the top surface of the sand. Permit the tamper to fall freely under gravitational attraction on each drop.

7- Adjust the surface, remove loose sand from the base and lift the mold vertically. If surface moisture is still present the sand will retain the moulded shape. When the sand slumps slightly, it indicates that it has reached S.S.D condition.

Procedure:-

1 -Weigh 500gm of the S.S.D sample.

2- Partially fill the Pycnometer with water. Immediately put into the Pycnometer 500gm saturated surfacedry aggregate.

3- Then fill with additional water to approximately 90%of capacity.4- Roll; invert the Pycnometer to eliminate all air bubbles.

5-Adjust its temperature to 23±1.7 °C by putting the Pycnometer in a water bath for an hour.6-Bring the water level in the Pycnometer to its calibrated capacity.

7- Determine the total weight of the Pycnometer, specimen and water.

8- Remove the fine aggregate from the Pycnometer, dry to constant weight at temp. 110±5 C, cool in air atroom temperature for one hour, and weigh.

9- Determine the weight of the Pycnometer filled to its capacity with water at 23 o C

Calculations:-

1-**Calculate the bulk specific gravity as follows:-**

Bulk sp. gr. = A / (B + S – C)

Where:

A: Weight of oven —dry specimen in air, (gm).

B: Weight of Pycnometer filled with water, (gm)

S: Weight of the saturated surface-dry specimen. (500 gm)

C: Weight of Pycnometer with specimen and water to calibration mark, (gm).

1- Calculat the bulk specific gravity (SSD) as follows:

Bulk specific gravity (SSD) = S / (B + S – C)

2- Calculate the apparent Specific Gravity as follows:-

Apparent specific gravity=. **A / (B + A - C)**

3- Calculate the percentage of absorption as follows:-

Absorption = [(S – A) / A x] 100

Result:

Experiment No. 13

Sieve Analysis of fine and coarse aggregates

Object: This method covers the determination of the particle size distribution the fine and coarse aggregateby sieving.

Materials:

1. The weight of test sample of fine aggregate shall be, after drying, approximately (500 gm).
2. The weight of test sample of coarse aggregate shall conform to the following:

N.M.S (mm)	Minimum Weight (kg)
9.5	1
12.5	2
19	5
25	10
37.5	15

Apparatus:

1. Balance: For fine aggregate accurate for 0.5gm.For coarse aggregate accurate for 0.5gm.
2. Containers to carry the sample.
3. Oven.
4. Mechanical Sieve shaker.
5. Two sets of sieve:-For fine aggregate [No.4 , No.8, No.16 , No.30 , No.50, No.100] For coarse aggregate [37.5mm , 19mm ,9.5mm, No.4 , No.8] In addition to a pan and a cover for each set.

Procedure:

1- Put the sample in the oven at 110°C.

2-Determine the empty weight for each sieve and record.

3-Nest the sieve in order of decreasing size of opening from top to bottom place the sample on the top sieve.

4- Agitate (shake) the sieve by placing the set on the mechanical shaker for 10min.

5. Open the set of sieve carefully so that no loosing of materials is expected.

6-Weigh each sieves with the residue record its weight.

7- Tabulate your data in a suitable shape.

8. Make sure that the summation of the residue weights equals to the original sample weight with a difference not more than 1% of the original weight.

9-The table should contain:

10 Fineness Modulus for fine aggregate can be determined as: -

$$F.M. = \frac{\Sigma \text{ Cumulative residue percentage}}{100}$$

No. of sieve	**Sieve empty Wt**	**Sieve +residue Wt**	**Residue Wt**	**Residue %**	**% Cum Residue**	**% Passing**

- It must be within-(2.6 - 3.1) for sand.

Notes:

1-The sieves dimensions are

No. of Sieve	**100**	**50**	**30**	**16**	**8**	**4**	**3/8"**	**1/2"**	**3/4"**	**1"**	**1.5"**
Size of Opening (mm)	**0.150**	**0.3**	**0.6**	**1.18**	**2.36**	**4.75**	**9.5**	**12.5**	**19**	**25.4**	**37.5**

2- The results must be companied with ASTM Specification [C33-99a] - For Fine aggregate:

Sieve No.	Sieve size	% Passing
3/4"	1.9mm	100
No.4	4.75mm	95-100
No.8	2.36mm	80-100
No.16	1.18mm	50-85
No.30	0.600mm	25-60
No.50	0.3mm	10-30
No.100	0.15mm	2-10

b- For Coarse aggregate: See table (1).

TABLE 2 Grading Requirements for Coarse Aggregates

Size Number	Nominal Size (Sieves with Square Openings)	Amounts Finer than Each Laboratory Sieve (Square-Openings), Mass Percent													
		100 mm (4 in.)	90 mm (3½ in.)	75 mm (3 in.)	63 mm (2½ in.)	50 mm (2 in.)	37.5 mm (1½ in.)	25.0 mm (1 in.)	19.0 mm (¾ in.)	12.5 mm (½ in.)	9.5 mm (⅜ in.)	4.75 mm (No. 4)	2.36 mm (No. 8)	1.18 mm (No. 16)	300 µm (No.50)
1	90 to 37.5 mm (3½ to 1½ in.)	100	90 to 100	...	25 to 60	...	0 to 15	...	0 to 5	...	...	...	...	...	...
2	63 to 37.5 mm (2½ to 1½ in.)	...	...	100	90 to 100	35 to 70	0 to 15	...	0 to 5	...	...	...	...	...	...
3	50 to 25.0 mm (2 to 1 in.)	...	...	...	100	90 to 100	35 to 70	0 to 15	...	0 to 5	...	...	...	...	...
357	50 to 4.75 mm (2 in. to No. 4)	...	...	...	100	95 to 100	...	35 to 70	...	10 to 30	...	0 to 5	...	...	...
4	37.5 to 19.0 mm (1½ to ¾ in.)	...	...	...	...	100	90 to 100	20 to 55	0 to 15	...	0 to 5	...	...	...	...
467	37.5 to 4.75 mm (1½ in. to No. 4)	...	...	...	...	100	95 to 100	...	35 to 70	...	10 to 30	0 to 5	...	...	...
5	25.0 to 12.5 mm (1 to ½in.)	...	...	...	...	...	100	90 to 100	20 to 55	0 to 10	0 to 5	...	...	...	...
56	25.0 to 9.5 mm (1 to ⅜ in.)	...	...	...	...	...	100	90 to 100	40 to 85	10 to 40	0 to 15	0 to 5	...	...	...
57	25.0 to 4.75 mm (1 in. to No. 4)	...	...	...	...	...	100	95 to 100	...	25 to 60	...	0 to 10	0 to 5	...	...
6	19.0 to 9.5 mm (¾ to ⅜ in.)	...	...	...	...	...	...	100	90 to 100	20 to 55	0 to 15	0 to 5	...	...	...
67	19.0 to 4.75 mm (¾ in. to No. 4)	...	...	...	...	...	...	100	90 to 100	...	20 to 55	0 to 10	0 to 5	...	...
7	12.5 to 4.75 mm (½ in. to No. 4)	...	...	...	...	...	...	...	100	90 to 100	40 to 70	0 to 15	0 to 5	...	...
8	9.5 to 2.36 mm (⅜ in. to No. 8)	...	...	...	...	...	...	...	...	100	85 to 100	10 to 30	0 to 10	0 to 5	...
89	9.5 to 1.18 mm (⅜in. to No. 16)	...	...	...	...	...	...	...	...	100	90 to 100	20 to 55	5 to 30	0 to 10	0 to 5
9[A]	4.75 to 1.18 mm (No. 4 to No. 16)	...	...	...	...	...	...	...	...	...	100	85 to 100	10 to 40	0 to 10	0 to 5

[A] Although size 9 aggregate is defined in Terminology C 125 as a fine aggregate, it is included as a coarse aggregate when it is combined with a size 8 material to create a size 89, which is a coarse aggregate as defined by Terminology C 125.

Calculation:

Result:

Experiment No.14

Object- To ascertain the bulking phenomena of given sample of sand.

Apparatus- 1000ml measuring jar, brush.etc

Introduction- Increase in volume of sand due to presence of moisture is known as bulking of sand. Bulking is due to the formation of thin film of water around the sand grains and the interlocking of air in between the sand grains and the film of water. When more water is added sand particles get submerged and volume again becomes equal to dry volume of sand. To compensate the bulking effect extra sand is added in the concrete so that the ratio of coarse to fine aggregate will not change from the specified value. Maximum increase in volume may be 20% to 40% when moisture content is 5% to 10% by weight. Fine sands show greater percentage of bulking than coarse sands with equal percentage of moisture.

Procedure-

1. Take 1000 ml measuring jar.
2. Fill it with loose dry sand up to 500ml without tamping at any stage of filling.
3. Then pour that sand on a pan and mix it thoroughly with water whose volume is equal to 2% of that of dry loose sand.
4. Fill the wet loose sand in the container and find the volume of the sand which is in excess of the dry volume of the sand.
5. Repeat the procedure for moisture content of 4%, 6%, 8%, etc, and note down the readings.
6. Continue the procedure till the sand gets completely saturated i.e., till it reaches the original volume of 500 ml.

Observations-

S.No.	Volume of dry loose sand V_1	% moisture content Added	Volume of wet loose sand V_2	% Bulking V_2-V_1/V_1
1	500 ml	2%		
2		4%		
3		6%		
4		8%		
5				
6				

Graph- Draw a graph between percentage moisture content on X-axis and percentage bulking on Y-axis. The points on the graph should be added as a smooth curve. Then from the graph, determine maximum percentage of buling and the corresponding moisture content.

Precautions-

1. While mixing water with sand grains, mixing should be through and uniform.
2. The sample should not be compressed while being filled in jar.
3. The sample must be slowly and gradually poured into measuring jar from its top.
4. Increase in volume of san due to bulking should be measured accurately.

Result- The maximum bulking of the given sand is …….at.....% of moisture content.